نیک بهداد

تولید کننده انواع میلگرد ساده، مفتول و ترانس صنعتی،

انکر و استد بولت، اتصالات صنعتی و ساختمانی

۰۲۱ - ۴۶۸۲۲۲۹۵
۰۹۳۷۴۸۴۸۳۰۷
۰۹۳۰۵۳۷۶۷۶۷
www.nikbehdad.com
تهران - شهر قدس

شرکت نیک بهداد استیل

تولید کننده تولید کننده انواع میلگرد ســاده، مفتول و ترانس صنعتی، انکر و اســتد بولت، اتصالات صنعتی و ساختمانی در ســایزها و گریدهای متنوع، در عرصه بازارهای داخلی و خارجی مشــغول به فعالیت می‌باشــد. این شرکت از سال ۱۳۸۵ با راه اندازی خطوط نورد گرم آغاز به کار کرده و با هدف کسب مزیت رقابتی پایدار از طریق اســتراتژی پیشروی و واکنشی با تاکتیک ادغام رو به جلو واحدهای کشش سرد کلاف و شاخه و دیگر فرآوری‌های میلگرد (پیچ-انکر-استاد بولت و ...) را نیز راه اندازی کرده است.

سازمان ملی استاندارد ایران

محصولات تولیدی

میلگرد ساده

جدول مشخصات فنی محصول

Product name	Size (mm)	Grade	Standard
Hot Rolled Steel Bar	100 ـ 12000 (L)	س 240	INSO3132

مفتول کلاف و شاخه

جدول مشخصات فنی محصول

Product name	Size (mm)	Diameter Tolerance (mm)
Coiled Wire Rod	3-12 (D)	± 0.02
Straight Wire Rod	200-6000 (L) 3-12(D)	± 0.02

Cold Drawn Steel Bar

میلگرد ترانس (شَفت)

■ جدول مشخصات فنی محصول

Diameter Tolerance (mm)	Physical Dimension (mm)	Product name
0.03	1000-6000 (L) 10-60(D)	**Oil-Tempered**
± 0.03	1000-6000 (L) 30-100(D)	**Single Polish**
± 0.03	1000-6000 (L) 30-100(D)	**Double Polish**

Types of Anchors

U Bolt

L Bolt

J Bolt

انواع انکر بولت

■ جدول مشخصات فنی محصول

Standard	Grade	Size	Product name
ASTM F1554/ISO898	36-55/4.8-6.8-8.8-10.9	As Drawing	**L Bolt**
ASTM F1554/ISO898	36-55/4.8-6.8-8.8-10.9	As Drawing	**J Bolt**
ASTM F1554/ISO898	36-55/4.8-6.8-8.8-10.9	As Drawing	**U Bolt**

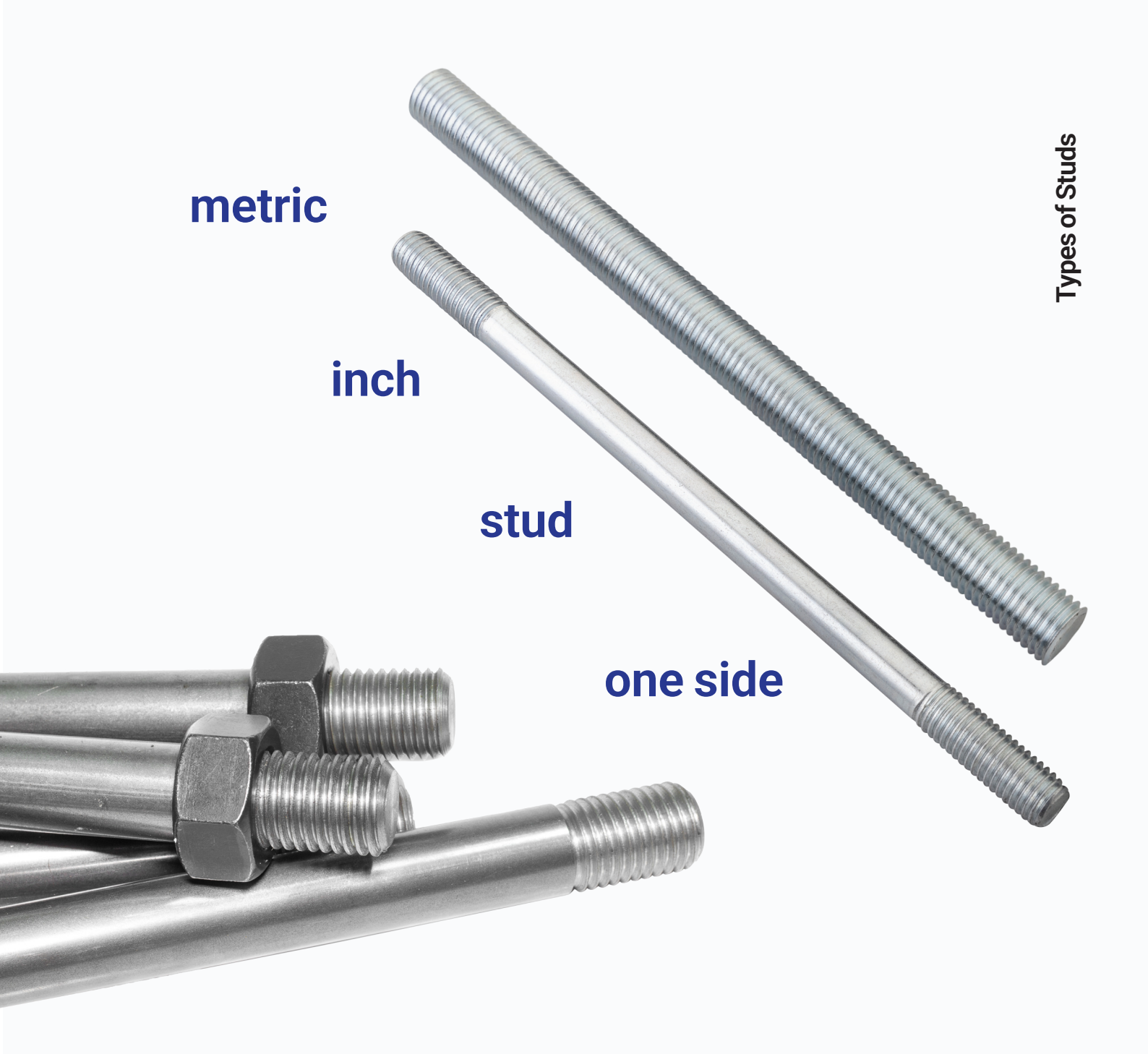

انواع استد بولت

■ جدول مشخصات فنی محصول

Standard	Grade	Size	Product name
ASTM A193/A320	B5-B6-B7-B7m-B8-B16	As Drawing	**Stud Bolt**
ASTM A193/A320	B5-B6-B7-B7m-B8-B16	As Drawing	**metric threaded rod**
ASTM A193/A320	B5-B6-B7-B7m-B8-B16	As Drawing	**inch threaded rod**
ASTM A193/A320	B5-B6-B7-B7m-B8-B16	As Drawing	**one side**

Types of Washer

Flat washer

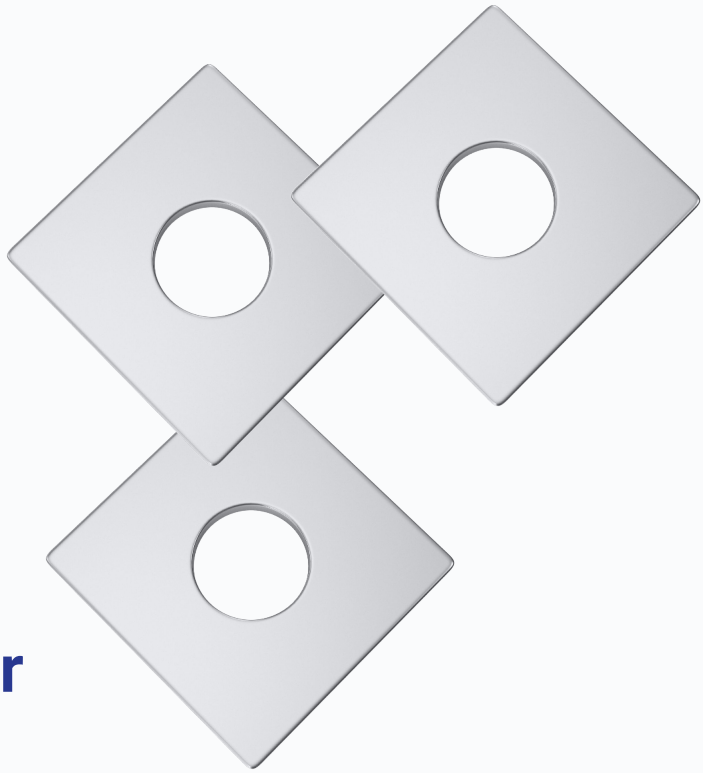

Square washer

واشر

جدول مشخصات فنی محصول

Standard	Size	Product name
DIN125	M5-M100 (mm)	Flat Washer
DIN436	M5-M100 (mm)	Square Washer

محصولات تامین

Cold Drawn Steel Bar

میلگرد پیلینگ و سنگ خورده

■ جدول مشخصات فنی محصول

Diameter Tolerance (mm)	Physical Dimension (mm)	Product name
±0.03	1000-6000 (L) 10-60(D)	**Peeled Bar**
±0.01	1000-6000 (L) 30-100(D)	**Grind Bar**

Hex Bolt

Nuts

Types of Hex Bolts and Nuts

انواع پیچ و مهره

جدول مشخصات فنی محصول

Standard	Grade	Size (M)	Product name
DIN6914	4.8-6.8-8.8-10.9-12.9	12-36	**Hex Bolt**
DIN931	4.8-6.8-8.8-10.9-12.9	1.6-39	**Hex Bolt**
DIN933	4.8-6.8-8.8-10.9-12.9	1.6-200	**Hex Bolt**
DIN934	6-8-10-12	M12-M36 (mm)	**Hex Nuts**
ASTM A194	5-6-2H-2Hm-8-16	1.4 -4 (inch)	

Chemical Requirements

Carbon, Alloy Steel and Stainless Steel Bolting Materials for Low Temperature Services

ASTM Designation A 320

Type	Grade Symbol	Material	Carbon %	Manganese %	Phosphorus %	Sulfur %	Silicon %	Chromium %	Nikel %	Molydenum %	Titanium %	Columbium & Tantalum %	Selenium %	Boron %
Ferritic Steel	L7, L7M & L70	AISI 4140, 4142 & 4145	0.38~0.48	0.75~1.00	0.035 max	0.040 max	0.15~0.35	0.80~1.10		0.15~0.25				
	L7A & L71	AISI 4037	0.35~0.40	0.70~0.90	0.035 max.	0.040 max.	0.15~0.35			0.20~0.30				
	L7B &L72	AISI 4137	0.35~0.40	0.70~0.90	0.035 max	0.040 max.	0.15~0.35	0.80~1.10		0.15~0.25				
	L43	AIAI 4340	0.38~0.43	0.60~0.85	0.035 max	0.040 max.	0.15~0.35	0.70~0.90	1.65~2.00	0.20~0.30				
	L1		0.17~0.24	0.70~1.40	0.035 max.	0.050 max.	0.15~0.30							0.0005~0.003
Austenitic Steels	B8 & B8A	AISI 304	0.08 max.	2.00 max	0.045 max	0.030 max.	1.00 max.	18.00~20.00	8.00~10.50					
	B8C & B8CA	AISI 347	0.08 max.	2.00 max	0.045 max	0.030 max.	1.00 max.	17.00~19.00	9.00~13.00			10 x carbon content min.		
	B8F & B8FA	AISI 303 + sulfur	0.15 max.	2.00 max.	0.20 max.	0.15 min.	1.00 max.	17.00~19.00	8.00~10.00					
	B8F & B8FA	AISI 303 + selenium	0.15 max.	2.00 max	0.20 max.	0.060 max.	1.00 max.	17.00~19.00	8.00~10.00				0.15~0.35	
	B8M & B8MA	AISI 316	0.08 max.	2.00 max	0.045 max	0.030 max.	1.00 max.	16.00~18.00	10.00~14.00	2.00~3.00				
	B8P & B8PA	AISI 305 + restriced carbon	0.08 max.	2.00 max.	0.045 max	0.030 max.	1.00 max.	17.00~19.00	10.50~13.00					
	B8T & B8TA	AISI 321	0.08 max.	2.00 max.	0.045 max.	0.030 max.	1.00 max.	17.00~19.00	9.00~12.00		5 x carbon content min.			
	B8LN & B8LNA	AISI 304N + restriced carbon	0.030 max.	2.00 max.	0.045 max.	0.030 max.	1.00 max.	18.00~20.00	8.00-10.50					
	8MLN & 8MLNA	AISI 316N + restriced carbon	0.030 max	2.00 max.	0.045 max.	0.030 max.	1.00 max.	16.00~18.00	10.00~14.00	2.00~3.00				

Mechanical Requirements

Carbon, Alloy Steel and Stainless Steel Bolting Materials for Low Temperature Services

ASTM Designation A 320

Type	Grade Symbol	Diameter Inch (mm.)	Heat Treatment	Tensile Strength, min., ksi (Mpa)	Yield Strength, min., 0.2 % offset, ksi (Mpa)	Elongation in 4 D, min., %	Reduction of Area, min., %	Hardness, max.
Ferritic Steel	L7, L7A, L7B, L7C, L70, L71, L72 & L73	2½ (65) and under	quenched and tempered	125 (860)	105 (725)	16	50	
	L43	up to 4 (100), included	quenched and tempered	125 (860)	105 (725)	16	50	
	L7M	2½ (65) and under	quenched and tempered at 1,150 °F (620°C), min.	100 (690)	80 (550)	18	50	235 HB or 99 HRB
	L1	1 (25.4) and under	quenched and tempered	125 (860)	105 (720)	16	50	
Austenitic Steels	B8, B8C, B8F, B8M, B8P, B8T, B8LN & B8MLN	Classes1, all diameters	carbide solution treated	75 (515)	30 (205)	35	50	223 HB or 96 HRB
	B8A, B8CA, B8FA, B8MA, B8PA, B8TA, B8LNA, B8MLNA, B8NA & B8MNA	Classes1A, all diameters	carbide solution treated in the finished condition	75 (515	30 (205)	35	50	192 HB or 90 HRB
	B8, B8C, B8F, B8P & B8T	Classes 2, ¾ (20) and under	carbide solution treated in the finished condition	125 (860)	100 (690)	12	35	321 HB 35 HRC
		over ¾ to 1 (20 to 25) included		115 (795)	80 (550)	15	30	321 HB 35 HRC
		over 1 to 1¼ (25.4 to 31.6) included		105 (725)	65 (450)	20	35	321 HB 35 HRC
		over 1¼ to 1½ (32 to 40) included		100 (690)	50 (345)	28	45	321 HB 35 HRC
	B8M	Classes 2, ¾ (20) and under	carbide solution treated in the finished condition	110 (760)	95 (665)	15	45	321 HB 35 HRC
		over ¾ to 1 (20 to 25) included		100 (690)	80 (550)	20	45	321 HB 35 HRC
		over 1 to 1¼ (25.4 to 31.6) included		95 (655)	65 (450)	25	45	321 HB 35 HRC
		over 1¼ to 1½ (32 to 40) included		90 (620)	50 (345)	30	45	321 HB 35 HRC

Impact Energy Absorption Requirements

ASTM Designation A 320

Size of Specimen, mm.	Minimum Impact Value Required for Average of each Set of 3 Specimens, ft-lbf (J)	Minimum Impact Value Permitted for 1 Specimen, Only of a Set, ft-lbf (J)
Grade L7M, L70, L71, L72, L73, L7, L7A, L7B & L7C		
10 by 10	20 (27)	15 (20)
10 by 7.5	16 (22)	12 (16)
Grade L1		
10 by 10	40 (54)	30 (41)
10 by 7.5	32 (44)	24 (32)

Chemical Requirements

Carbon, Alloy Steel and Stainless Steel Bolting Materials for High Temperature Services

ASTM Designation A 193

Type	Grade Symbol	Material	Carbon %	Manganese %	Phosphorus %	Sulfur %	Silicon %	Chromium %	Nikel %	Molydenum %	Titanium %	Columbium & Tantalum %	Vanadium %	Copper %	Nitrogen %
Ferritic Steel	B5	AISI 501	0.10 min.	1.00 max.	0.040 max.	0.030 max.	1.00 max.	4.00~6.00		0.40~0.65					
	B6 & B6X	AISI 410	0.15 max.	1.00 max.	0.040 max.	0.030 max.	1.00 max.	11.50~13.50							
	B7 & B7M	AISI 4140, 4142, 4145, 4140H, 4142H & 4145H	0.37~0.49	0.65~1.10	0.035 max.	0.040 max.	0.15~0.35	0.75~1.20		0.15~0.25					
	B16	EN40CrMoV4.6	0.36~0.47	0.45~0.70	0.035 max.	0.040 max.	0.15~0.35	0.80~1.15		0.50~0.65			0.25~0.35		
Austenitic Steels	B8 & B8A	AISI 304	0.08 max.	2.00 max.	0.045 max.	0.030 max.	1.00 max.	18.00~20.00	8.00~10.50						
	B8C & B8CA	AISI 347	0.08 max.	2.00 max.	0.045 max.	0.030 max.	1.00 max.	17.00~19.00	9.00~13.00			10 x carbon content min.			
	B8M, B8MA, B8M2 & B8M3	AISI 316	0.08 max.	2.00 max.	0.045 max.	0.030 max.	1.00 max.	16.00~18.00	10.00~14.00	2.00~3.00					
	B8N & B8NA	AISI 304N	0.08 max.	2.00 max.	0.045 max.	0.030 max.	1.00 max.	18.00~20.00	8.00~10.50						0.10~0.16
	B8P & B8PA	AISI 305 + restriced cabon	0.08 max.	2.00 max.	0.045 max.	0.030 max.	1.00 max.	17.00~19.00	10.50~13.00						
	B8R & B8RA	XM19	0.06 max.	4.00~6.00	0.040 max.	0.030 max.	1.00 max.	20.50~23.50	11.50~13.50	1.50~3.00		0.10~0.30	0.10~0.30		0.20~0.40
	B8S & B8SA	S21800 + restricted phosphorus	0.10 max.	7.00~9.00	0.040 max.	0.040 max.	3.50~4.50	16.00~18.00	8.00~9.00						0.08~0.18
	B8T & B8TA	AISI 321	0.08 max.	2.00 max.	0.045 max.	0.030 max.	1.00 max.	17.00~19.00	9.00~12.00		5 x carbon content min.				
	B8LN & B8LNA	AISI 304N + restriced cabon	0.030 max.	2.00 max.	0.045 max.	0.030 max.	1.00 max.	18.00~20.00	8.00-10.50						0.10~0.16
	B8MN & B8MNA	AISI 316N	0.08 max	2.00 max.	0.045 max.	0.030 max.	1.00 max.	16.00~18.00	10.00~14.00	2.00~3.00					0.10~0.16
	B8MLN & B8MLNA	AISI 316N + restriced cabon	0.030 max.	2.00 max.	0.045 max.	0.030 max.	1.00 max.	16.00~18.00	10.00~14.00	2.00~3.00					0.10~0.16
	B8MLCuN & B8MLCuNA	S31254	0.020 max.	1.00 max.	0.030 max.	0.010 max.	0.80 max.	19.50~20.50	17.50~18.50	6.00~6.50				0.50~1.00	0.18~0.22

Mechanical Requirements

Carbon, Alloy Steel and Stainless Steel Bolting Materials for High Temperature Services

ASTM Designation A 193

Type	Grade Symbol	Diameter Inch (mm.)	Minimum Tempering Temperature °F (C)	Tensile Strength, min., ksi (Mpa)	Yield Strength, min., 0.2 % offset, ksi (Mpa)	Elongation in 4 D, min., %	Reduction of Area, min., %	Hardness, max
Ferritic Steel	B5	up to 4 (100), included	1,100 (593)	100 (690)	80 (550)	16	50	
	B6	up to 4 (100), included	1,100 (593)	110 (760)	85 (585)	15	50	
	B6X	up to 4 (100), included	1,100 (593)	90 (620)	70 (485)	16	50	26 HRC
	B7	2½ (65) and under	1,100 (593)	125 (860)	105 (720)	16	50	35 HRC or 321
		over 2½ to 4 (65 to 100)	1,100 (593)	115 (795)	95 (655)	16	50	33 HRC or 302 HB
		over 4 to 7 (100 to 180)	1,100 (593)	100 (690)	75 (515)	18	50	29 HRC or 277 HB
	B7M	2½ (65) and under	1,150 (620)	100 (690)	80 (550)	18	50	235 HB or 99 HRB
		over 2½ to 4 (65 to 100)	1,150 (620)	100 (690)	80 (550)	18	50	235 HB or 99 HRB
		over 4 to 7 (100 to 180)	1,150 (620)	100 (690)	75 (515)	18	50	235 HB or 99 HRB
	B16	2½ (65) and under	1,200 (650)	125 (860)	105 (725)	18	50	35 HRC or 321
		over 2½ to 4 (65 to 100)	1,200 (650)	110 (760)	95 (655)	17	45	33 HRC or 302 HB
		over 4 to 7 (100 to 180)	1,200 (650)	100 (690)	85 (585)	16	45	29 HRC or 277 HB

Type	Grade Symbol	Diameter Inch (mm.)	Heat Treatment	Tensile Strength, min., ksi (Mpa)	Yield Strength, min., 0.2 % offset, ksi (Mpa)	Elongation in 4 D, min., %	Reduction of Area, min., %	Hardness, max.
Austenitic Steels	B8, B8C, B8M, B8P, B8T, B8LN & B8MLN	Classes1 and 1D, all diameters	carbide solution treated	75 (515)	30 (205)	30	50	223 HB or 96 HRB
	B8A, B8CA, B8MA, B8PA, B8TA, B8LNA, B8MLNA, B8NA & B8MNA	Classes1A, all diameters	carbide solution treated in the finished condition	75 (515	30 (205)	30	50	192 HB or 90 HRB
	B8N, B8MN & B8MLCuN	Classes1B and 1D, all diameters	carbide solution treated	80 (550)	35 (240)	30	40	223 HB or 96 HRB
	B8R	Classes1C and 1D, all diameters	carbide solution treated	100 (690)	55 (380)	35	55	271 HB 28 HRC
	B8RA	all diameters	carbide solution treated in the finished condition	100 (690)	55 (380)	35	55	271 HB 28 HRC
	B8S	all diameters	carbide solution treated	95 (655)	50 (345)	35	35	271 HB 28 HRC
	B8SA	all diameters	carbide solution treated in the finished condition	95 (655)	50 (345)	35	35	271 HB 28 HRC
	B8, B8C, B8P, B8T, B8N & B8MLCuN	Classes 2, ¾ (20) and under	carbide solution treated in the finished condition	125 (860)	100 (690)	12	35	321 HB 35 HRC
		over ¾ to 1 (20 to 25) included		115 (795)	80 (550)	15	35	321 HB 35 HRC
		over 1 to 1¼ (25.4 to 31.6) included		105 (725)	65 (450)	20	35	321 HB 35 HRC
		over 1¼ to 1½ (32 to 40) included		100 (690)	50 (345)	28	45	321 HB 35 HRC
	B8M, B8MN & B8MLCuN	Classes 2, ¾ (20) and under	carbide solution treated in the finished condition	110 (760)	95 (665)	15	45	321 HB 35 HRC
		over ¾ to 1 (20 to 25) included		100 (690)	80 (550)	20	45	321 HB 35 HRC
		over 1 to 1¼ (25.4 to 31.6) included		95 (655)	65 (450)	25	45	321 HB 35 HRC
		over 1¼ to 1½ (32 to 40) included		90 (620)	50 (345)	30	45	321 HB 35 HRC
	B8M2	Classes 2B, 2 (50.6) and under	carbide solution treated in the finished condition	95 (655)	75 (515)	25	40	35 HRC or 321
		over 2 to 2½ (50.8 to 63.2) included		90 (620)	65 (450)	30	40	35 HRC or 321
		over 2½ to (63.2 to 76.2) included		80 (550)	55 (380)	30	40	35 HRC or 321
	B8M3	Classes 2C, 2 (50.8) and under	carbide solution treated in the finished condition	85 (585)	65 (45)	30	60	35 HRC or 321
		over 2 to (50.8)		85 (585)	60 (415)	30	60	35 HRC or 321

Chemical Requirements

Carbon, Alloy Steel and Stainless Steel Nuts for Bolts for High-Pressure and High Temperature Services

ASTM Designation A 194

Grade Symbol	Material	Carbon %	Manganese %	Phosphorus %	Sulfur %	Silicon %	Chromium %	Nikel %	Molydenum %	Titanium %	Columbium & Tantalum %	Selenium %	Vanadium %	Copper %	Nitrogen %
1	Carbon	0.15 min.	1.00 max.	0.040 max.	0.050 max.	0.40 max.									
2, 2H & 2HM	Carbon	0.40 min.	1.00 max.	0.040 max.	0.050 max.	0.40 max.									
3	AISI 510	0.10 min.	1.00 max.	0.040 max.	0.030 max.	1.00 max.	4.00~6.00		0.40~0.65						
4	Carbon, Molybdenum	0.40~0.50	0.70~0.90	0.035 max.	0.040 max.	0.15~0.35			0.20~0.30						
6	AISI 410	0.15 max.	1.00 max.	0.040 max.	0.030 max.	1.00 max.	11.50~13.50								
6F	AISI 416 + sulfur	0.15 max.	1.25 max.	0.060 max.	0.15 min.	1.00 max.	12.00~14.00								
6F	AISI 416 + selenium	0.15 max.	1.25 max.	0.060 max.	0.060 max.	1.00 max.	12.00~14.00					0.15 min.			
7 & 7M	AISI 4140, 4142, 4145, 4140H, 4142H, 4145H	0.37~0.49	0.65~1.00	0.040 max.	0.040 max.	0.15~0.35	0.75~1.20		0.15~0.25						
8 & 8A	AISI 304	0.08 max.	2.00 max.	0.045 max.	0.030 max.	1.00 max.	18.00~20.00	8.00~10.50							
8C & 8CA	AISI 347	0.08 max.	2.00 max.	0.045 max.	0.030 max.	1.00 max.	17.00~19.00	9.00~13.00			10 x carbon content min.				
8F & 8FA	AISI 303 + sulfur	0.15 max.	2.00 max.	0.20 max.	0.15 min.	1.00 max.	17.00~19.00	8.00~10.00							
8F & 8FA	AISI 303 + selenium	0.15 max.	2.00 max.	0.20 max.	0.060 max.	1.00 max.	17.00~19.00	8.00~10.00				0.15 min.			
8M & 8MA	AISI 316	0.08 max.	2.00 max.	0.045 max.	0.030 max.	1.00 max.	16.00~18.00	10.00~14.00	2.00~3.00						
8N & 8NA	AISI 304N	0.08 max.	2.00 max.	0.045 max.	0.030 max.	1.00 max.	18.00~20.00	8.00~10.50							0.10~0.16
8P & 8PA	AISI 305 + restriced cabon	0.08 max.	2.00 max.	0.045 max.	0.030 max.	1.00 max.	17.00~19.00	10.50~13.00							
8R & 8RA	XM19	0.06 max.	4.00~6.00	0.040 max.	0.030 max.	1.00 max.	20.50~23.50	11.50~13.50	1.50~3.00		0.10~0.30		0.10~0.30		0.20~0.40
8S & 8SA	S21800 + restriced phosphorus	0.10 max.	7.00~9.00	0.040 max.	0.040 max.	3.50~4.50	16.00~18.00	8.00~9.00							0.08~0.18
8T & 8TA	AISI 321	0.08 max.	2.00 max.	0.045 max.	0.030 max.	1.00 max.	17.00~19.00	9.00~12.00		5 x carbon content min.					
8LN & 8LNA	AISI 304N + restriced cabon	0.030 max.	2.00 max.	0.045 max.	0.030 max.	1.00 max.	18.00~20.00	8.00-10.50							0.10~0.16
8MN & 8MNA	AISI 316N	0.08 max.	2.00 max.	0.045 max.	0.030 max.	1.00 max.	16.00~18.00	10.00~14.00	2.00~3.00						0.10~0.16
8MLN & 8MLNA	AISI 316N + restriced cabon	0.030 max.	2.00 max.	0.045 max.	0.030 max.	1.00 max.	16.00~18.00	10.00~14.00	2.00~3.00						0.10~0.16
8MLCuN	S31254	0.020 max.	1.00 max.	0.030 max.	0.010 max.	0.80 max.	19.50~20.50	17.50~18.50	6.00~6.50					0.50~1.00	0.18~0.22